Data sheet DS/FPD510–EN Rev. A

IOMaster FPD510
Compact integral orifice flowmeter

Low-cost measurement of small flowrates

Compact flowmeter for small pipelines & flowrates
— available for pipe sizes ½, 1 and 1½ in. (DN15, DN25 and DN50)
— a wide variety of standard orifice bores in each size enables very low flowrate measurement

Choice of threaded connection or flanged metering run
— flanged version includes necessary lengths of upstream and downstream pipework
— threaded version enables direct connection of threaded pipework

Direct-mount transmitter and manifold
— problems caused by impulse piping eliminated by mounting the transmitter and manifold directly onto the meter
— compact flowmeter assembly complete with manifold and ABB DP or Multivariable transmitter

Calibrated for optimum accuracy
— units can be water-calibrated, providing an element metering accuracy of up to 0.5 % of reading when used within calibrated range

Factory acceptance report
— supplied with report detailing results of critical inspection checks, plus certification data

EUROTEC
TECNOLOGIE IMPIANTISTICHE - AUTOMAZIONE - TELECONTROLLO

Power and productivity
for a better world™
ABB

IOMaster FPD510
Compact integral orifice flowmeter

IOMaster – compact integral orifice flowmeter

IOMaster is an integral orifice-based flowmeter designed to greatly simplify specification, installation and commissioning.

Its one-piece flowmeter assembly features the following:

— Orifice flowmeter assembly complete with choice of integral orifice plate bores, for pipe sizes 1/2, 1 and 1 1/2 in. (DN15, DN25 and DN40)
— Optional upstream and downstream pipework
— Integral 3- or 5-valve instrument manifold
— Integral DP or multivariable transmitter, factory-fitted to manifold
— Fully leak tested

Benefits

IOMaster avoids many of the difficulties involved in the sizing, selection, procurement, installation and commissioning of conventional orifice plate installations.

— With all the major components in one assembly, IOMaster eliminates the problems of sourcing multiple components. It provides large savings in cost and time due to the simplicity of the design and installation.
— Integral transmitter and manifold with compact tapping connections eliminates the need to run and connect impulse piping and offers:
  — guaranteed accuracy of plate positioning and installation of the tapping points
  — reduced possibility of impulse line blockage
  — reduced number of potential leakage points
— Replaceable orifice plates enable low-cost repair or re-ranging.
— The assembly is pressure tested in the factory, giving the user confidence that the connections between the tapping points and the transmitter are completely free of leaks.
— Every unit is flow calibrated, ensuring the performance of the complete flowmeter, not just the flow element.
— New 'through-the-glass' (TTG) keypad technology enables configuration without the need to remove instrument covers, even in hazardous areas.
— Factory configuration saves the user time during commissioning and ensures that the flowmeter output span truly matches that of the application flowrate.

Versions

IOMaster is available in two versions:
IOMaster V – a compact integral orifice flowmeter for general purpose measurement of liquids, gases and steam in volumetric units (actual volume). It uses either the ABB 266 DSH or ABB 364DS transmitter and provides a flow rate and total display with an output of 4 to 20 mA proportional to the actual volume flowrate.

IOMaster V has a stainless steel body and an alloy, 304 stainless steel or 316 stainless steel transmitter case.

There are 6 DP sensor ranges available. For optimum accuracy, select the sensor so that the full scale DP is in the shaded area and as close as possible to the maximum range of the sensor.

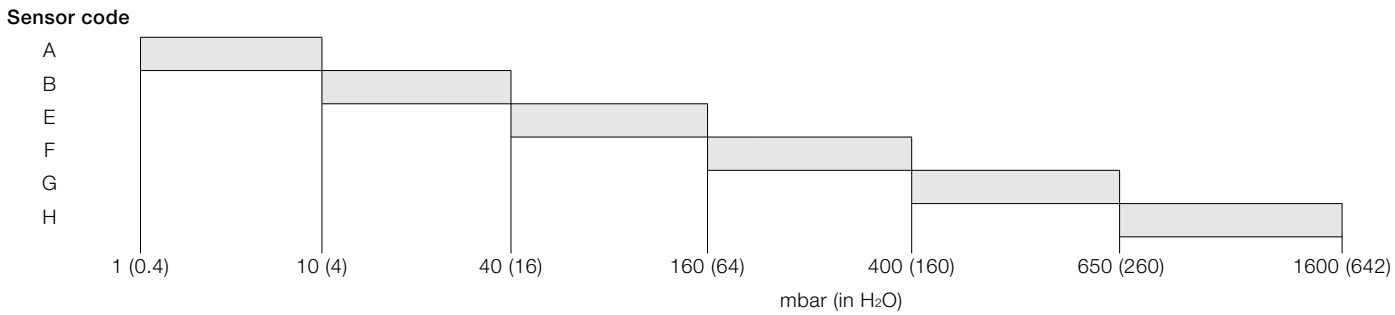

Table 1: IOMaster V full scale DP application range

IOMaster FPD510
Compact integral orifice flowmeter

IOMaster M – a compact integral orifice flowmeter, providing measurement directly in mass- or corrected volume-units for liquids and steam. Gas flow measurement is provided directly in reduced volume units. It uses the ABB 267CS multivariable transmitter to measure DP, temperature (from a user-supplied external temperature element) and pressure; providing a flowrate and total display and transmits a 4 to 20 mA signal proportional to the mass- or corrected volume-flowrate.

IOMaster M has a stainless steel body and an alloy transmitter case (optionally stainless steel).

There are 4 DP sensor ranges available. For optimum accuracy, select the sensor so that the full scale DP is in the shaded area and as close as possible to the maximum range of the sensor.

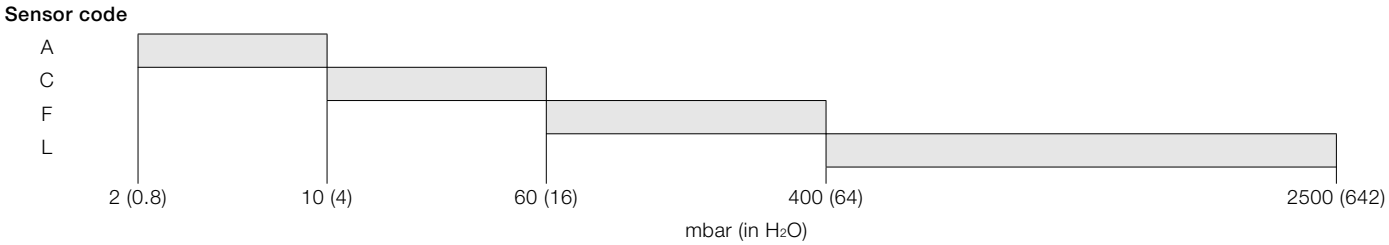

Table 2: IOMaster M full scale DP application range

Specification – general

Fluids
Liquids, gases and saturated steam

Line sizes
15, 25 and 40 mm (1/2, 1 and 1 1/2 in.)

Output signal
— Two-wire, 4 to 20 mA, selected for square-root output
— Low flow cut-off facility
— HART® communication provides digital process variable (%, mA or engineering units) superimposed on 4 to 20 mA signal, with protocol based on Bell202 FSK standard
— Optional Profibus PA, Foundation Fieldbus or Modbus communications

Accuracy
Calibrated
IOMaster V Beta:

<0.1	2.65 %
0.1 … 0.2	1.6 %
0.2 … 0.6	1.25 %
0.6 … 0.8	1.8 %

IOMaster M Beta:

<0.1	2.7 %
0.1 … 0.2	1.8 %
0.2 … 0.6	1.5 %
0.6 … 0.8	2.0 %

Repeatability
±0.2%

Pressure rating
Threaded
1/2 in. and 1 in. NPT:
— 20684 kPa at 149 °C (3000 psig at 300 °F)

1 1/2 in. NPT:
— 10 500 kPa at 149 °C (1500 psig at 300 °F)

Flanged
1/2 in., 1 in. and 1 1/2 in.:
— as flange rating

Temperature limitations
Process: –20 to 121 –°C (–4 to 250 °F)

Ambient
Note. LCD display may not be clearly readable below –20 °C (–4 °F) or above 70 °C (158 °F)

M1:	–40 and 85 °C (–40 and 185 °F)
V1:	Sensors A, B: –25 and 85 °C (–13 and 185 °F) Other sensors: –40 and 85 °C (–40 and 185 °F)
V2:	Sensors A to E incl.: –25 and 85 °C (–13 and 185 °F) Other sensors: –40 and 85 °C (–40 and 185 °F)

IOMaster FPD510
Compact integral orifice flowmeter

Specification – physical

Construction materials

Body
316 stainless steel

Orifice plate
316 stainless steel; Hastelloy-C1

Sealing gasket
Silicate ceramic filled TFE

Orifice bores

1/2 in.
0.020, 0.035, 0.065, 0.113, 0.150, 0.196, 0.270, 0.340 in.

1 in.
0.020, 0.035, 0.065, 0.113, 0.150, 0.196, 0.270, 0.340, 0.500, 0.612, 0.735 in.

1 1/2 in.
0.500, 0.612, 0.750, 0.918, 1.127 in.

Pipe schedule (where pipework selected)
40, 80

Manifold
Integral 3-valve manifold (optional 5-valve manifold)

Material certification
Construction materials 316 SST with 316 SST orifice plate or with 316 SST and Hastelloy C orifice plate conform to NACE Standard MR-0175-88.
Conformance is on process wetted materials only and does not include bolting.

Weights

Size in mm (in.)	Flange rating	Weight in kg (lb)
15 (1/2)	No flange/pipework	9 (19.8)
	ANSI 150 schedule 40	10.5 (23.1)
	ANSI 150 schedule 80	11 (24.3)
	ANSI 300 schedule 40	10.5 (23.1)
	ANSI 300 schedule 80	11 (24.3)
	NP16 schedule 40	10.5 (23.1)
	NP16 schedule 80	10.5 (23.1)
	NP40 schedule 40	10.5 (23.1)
	NP40 schedule 80	11 (24.3)
25 (1)	No flange/pipework	9 (19.8)
	ANSI 150 schedule 40	11.5 (25.4)
	ANSI 150 schedule 80	12 (26.5)
	ANSI 300 schedule 40	12.5 (27.6)
	ANSI 300 schedule 80	13 (28.7)
	NP16 schedule 40	12 (26.5)
	NP16 schedule 80	12.5 (27.6)
	NP40 schedule 40	12 (26.5)
	NP40 schedule 80	12.5 (27.6)
40 (1 1/2)	No flange/pipework	9 (19.8)
	ANSI 150 schedule 40	15 (33.1)
	ANSI 150 schedule 80	16 (35.3)
	ANSI 300 schedule 40	16 (35.3)
	ANSI 300 schedule 80	17.5 (38.6)
	NP16 schedule 40	15 (33.1)
	NP16 schedule 80	16.5 (36.4)
	NP40 schedule 40	15.5 (34.2)
	NP40 schedule 80	16.5 (36.4)

DP span

Sensor code	Upper range limit (URL)	Minimum span
A	1 kPa	0.05 kPa
	10 mbar	0.5 mbar
	4 in. H_2O	0.2 in. H_2O
B	4 kPa	0.2 kPa
	40 mbar	1.4 mbar
	16 in. H_2O	0.56 in. H_2O
C	6 kPa	0.2 kPa
	60 mbar	2 mbar
	24 in. H_2O	0.8 in. H_2O
E	16 kPa	0.54 kPa
	160 mbar	1.6 mbar
	64 in. H_2O	0.65 in. H_2O
F	40 kPa	0.4 kPa
	400 mbar	4 mbar
	160 in. H_2O	1.6 in. H_2O
G	65 kPa	0.65 kPa
	650 mbar	6.5 mbar
	260 in.H_2O	2.6 in. H_2O
H	160 kPa	1.6 kPa
	1600 mbar	16 mbar
	642 in. H_2O	6.4 in. H_2O
L	250 kPa	2.5 kPa
	2500 mbar	25 mbar
	1000 in. H_2O	10 in. H_2O

IOMaster FPD510
Compact integral orifice flowmeter

Differential pressure and orifice bore determination

Differential pressure

To calculate the approximate differential pressure produced at a known flow rate, use one of the following equations:

Metric units

Liquid:

$$h = gf\left[\frac{q(U.S.gpm)}{5.668 \times F_a \times K \times d^2}\right]^2$$

Gas:

$$h = \frac{GT_f}{P_f}\left[\frac{Q(scfh)}{7727 \times F_a \times F_{pv} \times K \times d^2 xY}\right]^2$$

Steam:

$$h = V\left[\frac{W(lb/hr)}{359 \times F_a \times K \times d^2 xY}\right]^2$$

where:

- d = bore diameter in mm
- F_a = thermal expansion factor of orifice plate
- G = specific gravity of gas
- g_f = specific gravity of liquid at flow conditions
- h = differential pressure in millibars
- K = flow coefficient
- P_f = process pressure in bar absolute
- Q = flow rate of gas
- q = flow rate of liquid
- T_f = process temperature in °K (= °C + 273.15)
- V = specific volume of steam in m^3/kg
- W = flow rate of steam
- Y = gas expansion factor
- F_{pv} = gas supercompressibility $F_{pv} = \sqrt{\frac{Zb}{ZF}}$
- Zb = basic compressibility
- ZF = flowing compressibility

US units

Liquid:

$$h = gf\left[\frac{q(U.S.gpm)}{5.668 \times F_a \times K \times d^2}\right]^2$$

Gas:

$$h = \frac{GT_f}{P_f}\left[\frac{Q(scfh)}{7727 \times F_a \times F_{pv} \times K \times d^2 xY}\right]^2$$

Steam:

$$h = V\left[\frac{W(lb/hr)}{359 \times F_a \times K \times d^2 xY}\right]^2$$

where:

- d = bore diameter in inches
- F_a = thermal expansion factor of orifice plate
- G = specific gravity of gas
- g_f = specific gravity of liquid at flow conditions
- h = differential pressure in in. H_2O
- K = flow coefficient
- P_f = process pressure in psia (psig + 14.7)
- Q = flow rate of gas
- q = flow rate of liquid
- T_f = process temperature in °R (= °F + 460)
- V = specific volume of steam in cu ft/lb
- W = flow rate of steam
- Y = gas expansion factor
- F_{pv} = gas supercompressibility $F_{pv} = \sqrt{\frac{Zb}{ZF}}$
- Zb = basic compressibility
- ZF = flowing compressibility

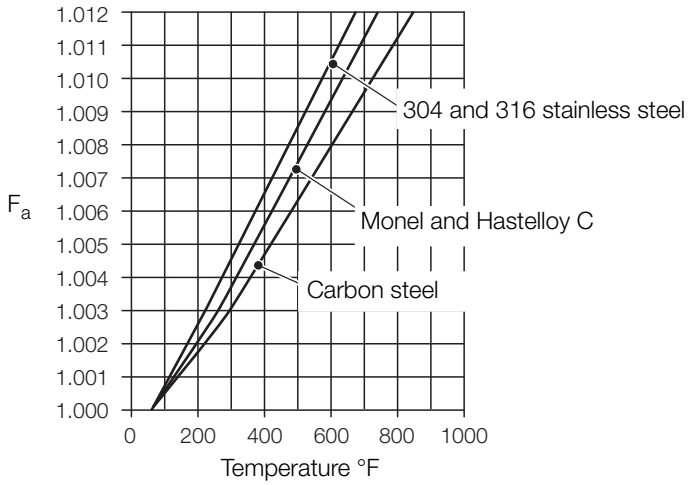

Fig. 1: Orifice plate materials – thermal expansion factor

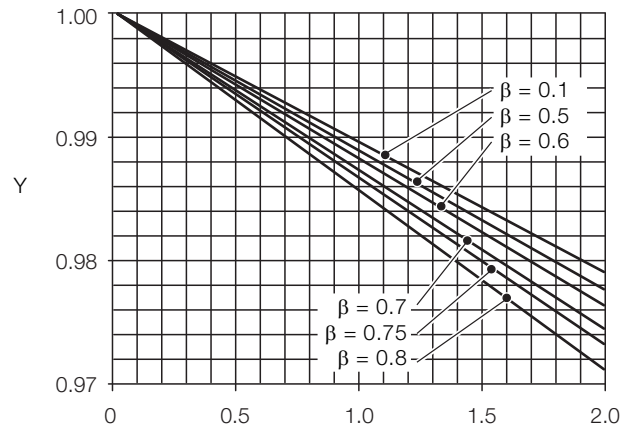

Fig. 2: Gas expansion factor

IOMaster FPD510
Compact integral orifice flowmeter

Dimensions

Dimensions in mm (in.)

IOMaster M design level 1

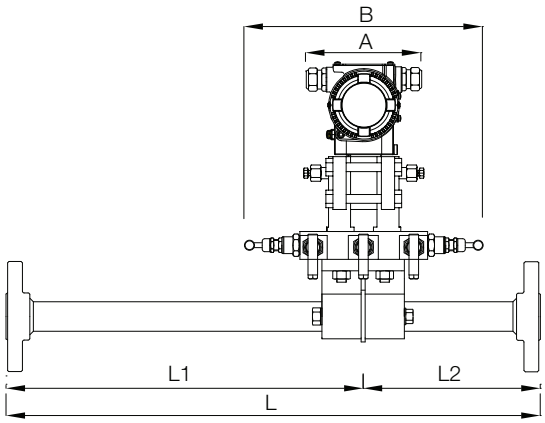

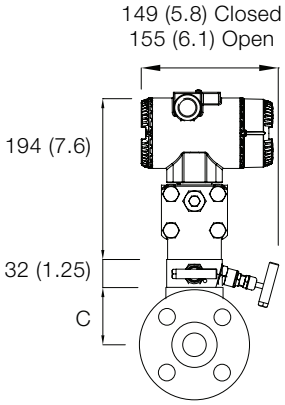

Dimension	A	B		C	L	L1	L2
		3-valve	5-valve				
12.5 (1/2)	140 (5.51) (over glands)	202 (7.95) closed 212 (8.35) open	252 (9.92) closed 269 (10.59) open	63.5 (2 1/2)	609.6 ± 4.8 (24 ± 3/16)	406.4 (16)	203.2 (8)
25 (1)				63.5 (2 1/2)	609.6 ± 4.8 (24 ± 3/16)	406.4 (16)	203.2 (8)
40 (1 1/2)				76.2 (3)	965.2 ± 4.8 (38 ± 3/16)	762 (30)	203.2 (8)

Dimensions in mm (in.)

IOMaster V design level 1

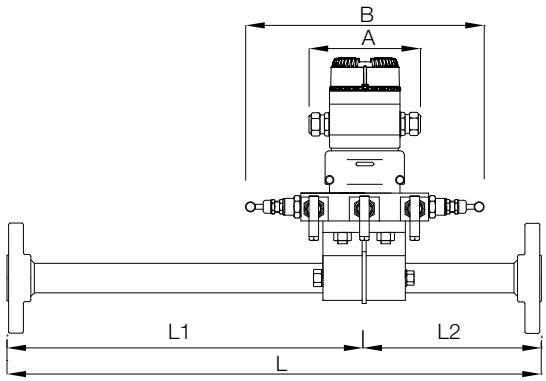

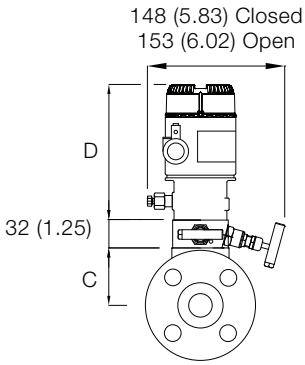

Dimension	A	B		C	D		L	L1	L2
		3-valve	5-valve		With display	Without display			
12.5 (1/2)	140 (5.51) (over glands)	202 (7.95) closed 212 (8.35) open	252 (9.92) closed 269 (10.59) open	63.5 (2 1/2)	153 (6.0)	124 (4.9)	609.6 ± 4.8 (24 ± 3/16)	406.4 (16)	203.2 (8)
25 (1)				63.5 (2 1/2)			609.6 ± 4.8 (24 ± 3/16)	406.4 (16)	203.2 (8)
40 (1 1/2)				76.2 (3)			965.2 ± 4.8 (38 ± 3/16)	762 (30)	203.2 (8)

IOMaster V design level 2

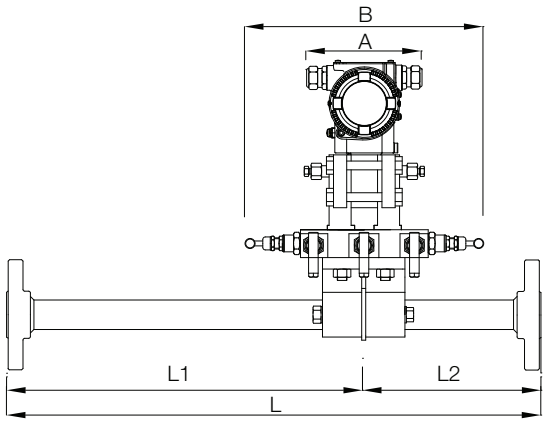

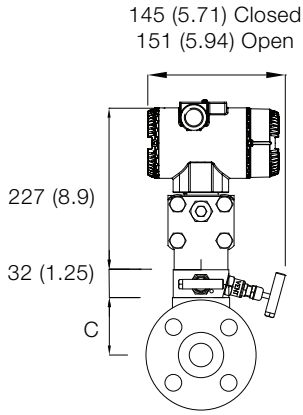

Dimension	A	B		C	L	L1	L2
		3-valve	5-valve				
12.5 (1/2)	140 (5.51) (over glands)	202 (7.95) closed 212 (8.35) open	252 (9.92) closed 269 (10.59) open	63.5 (2 1/2)	609.6 ± 4.8 (24 ± 3/16)	406.4 (16)	203.2 (8)
25 (1)				63.5 (2 1/2)	609.6 ± 4.8 (24 ± 3/16)	406.4 (16)	203.2 (8)
40 (1 1/2)				76.2 (3)	965.2 ± 4.8 (38 ± 3/16)	762 (30)	203.2 (8)

IOMaster FPD510
Compact integral orifice flowmeter

Ordering information

		Main code												Optional code					
IOMaster compact integral orifice flowmeter	**FPD510**	XX	XXX	X	X	XX	XX	X	X	X	X	X	X	XX	XX	XX	XX	XX	XX
Model and design level																			
IOMaster V, for volume flow, design level 1 (364DS)		V1																	
IOMaster V, for volume flow, design level 2 (266DSH)		V2																	
IOMaster M, for mass flow, design level 1 (267CS)		M1																	
IOMaster M, for mass flow, design level 2 (266CST)		M2																	
Meter size																			
15 mm (1/2 in.)			015																
25 mm (1 in.)			025																
40 mm (1 1/2 in.)			040																
Fluid																			
Liquid				L															
Gas				G															
Body material / orifice material																			
AISI 316 SST (1.4401) / AISI 316 SST (1.4401)					6														
AISI 316 SST (1.4401) / Hastelloy C					4														
Orifice bore																			
0.51 mm (0.020 in.)						A5													
0.89 mm (0.035 in.)						A8													
1.65 mm (0.065 in.)						B2													
2.87 mm (0.113 in.)						B5													
3.81 mm (0.150 in.)						B8													
4.98 mm (0.196 in.)						C2													
6.86 mm (0.270 in.)						C5													
8.64 mm (0.340 in.)						C8													
12.7 mm (0.500 in.)						D2													
15.54 mm (0.612 in.)						D5													
18.67 mm (0.735 in.)						D8													
19.05 mm (0.750 in.)						E2													
23.32 mm (0.918 in.)						E5													
28.63 mm (1.127 in.)						E8													

Continued on next page …

See page 14

IOMaster compact integral orifice flowmeter	FPD510	XX	XXX	X	X	XX	XX	X	X	X	X	X	X	XX	XX	XX	XX	XX	XX	XX
		Main code													Optional code					
		See page 12													See next page					

Pressure rating

No pipe / flanges	Y0
ASME CL 150 with Sch 40 pipework	A1
ASME CL 150 with Sch 80 pipework	B1
ASME CL 300 with Sch 40 pipework	A3
ASME CL 300 with Sch 80 pipework	B3
ISO7005 PN 16 with Sch 40 pipework	D2
ISO7005 PN 16 with Sch 80 pipework	F2
ISO7005 PN 40 with Sch 40 pipework	D4
ISO7005 PN 40 with Sch 80 pipework	F4

Pipeline orientation

Horizontal	H
Vertical	V

Manifold

Integral 3-valve manifold	3
Integral 5-valve manifold	5

DP span limits

0.05 … 1 kPa / 0.5 … 10 mbar / 0.2 … 4 in. H_2O	A
0.14 … 4 kPa / 1.4 … 40 mbar / 0.56 … 16 in. H_2O	B
0.2 … 6 kPa / 2 … 60 mbar / 0.8 … 24 in. H_2O	C
0.16 … 16 kPa / 1.6 … 160 mbar / 0.64 … 64 in. H_2O	E
0.27 … 16 kPa / 2.7 … 160 mbar / 1.08 … 64 in. H_2O	E
0.4 … 40 kPa / 4 … 400 mbar / 1.6 … 160 in. H_2O	F
0.65 … 65 kPa / 6.5 … 650 mbar / 2.6 … 260 in. H_2O	G
1.6 … 160 kPa / 16 … 1600 mbar / 6.4 … 642 in. H_2O	H
2.5 … 250 kPa / 25 … 2500 mbar / 10 … 1000 in. H_2O	L

Transmitter seal material

Without seal	0
Viton	3
PTFE	4
EPDM	5
Perbunan	6

Electronic housing material / electrical connection

Aluminium alloy / 1/2-14 NPT	A
Aluminium alloy / M20 x 1.5	B
AISI 304L SST / 1/2-14 NPT	H
AISI 304L SST / M20 x 1.5	L
AISI 316L SST / 1/2-14 NPT	S
AISI 316L SST / M20 x 1.5	T

Continued on next page …

IOMaster FPD510
Compact integral orifice flowmeter

	Main code												Optional code					
IOMaster compact integral orifice flowmeter	**FPD510**	XX	XXX	X	X	XX	XX	X	X	X	X	X	XX	XX	XX	XX	XX	XX	XX
			See page 12				See page 13												
Integrated digital display (LCD)																			
None (blind)												0							
LCD display												1							
LCD display (backlit)												2							
TTG (through-the-glass) controlled digital LCD display												5							
Output signal																			
HART digital communication and 4 … 20 mA												H1							
HART digital communication and 4 … 20 mA, SIL2 and SIL3 certified to IEC 61508												H2							
PROFIBUS PA												P1							
FOUNDATION Fieldbus												F1							
MODBUS RS 485												M1							
Wireless HART												W1							
Temperature element																			
Integral													AT						
Remote (element not included)													AR						
Calibration																			
Standard water calibration at reference conditions														CW					
Certificates																			
Material monitoring with inspection certificate 3.1 acc. EN 10204															C2				
Dye penetrant NDE of welds															C9				
Hydrostatic pressure test certificate															CB				
Material monitoring NACE MR 01-75 with inspection certificate 3.1 acc. EN 10204															CN				
PED certificate (Pressure Equipment Directive 97 / 23 / EC)															CP				
Explosion protection certification																			
Factory mutual (FM) – intrinsically safe																EA			
Factory mutual (FM) – explosion proof																EB			
Canadian standard association (CSA) – explosion proof																EE			
ATEX + FM + CSA																EN			
ATEX II 1/2 GD EEx ia + ATEX II 1/2 GD EEx d + ATEX EEx nL																EW			
Documentation language																			
German																	M1		
Italian																	M2		
Spanish																	M3		
French																	M4		
English																	M5		
Chinese																	M6		
Special applications																			
Degreased (oil- and grease-free) with inert capsule filling for oxygen applications																		P1	
Gold diaphragm (silicone oil-filled) for hydrogen applications																		P2	

Notes

Contact us

ABB Limited
Process Automation
Salterbeck Trading Estate
Workington, Cumbria
CA14 5DS
UK
Tel: +44 (0)1946 830 611
Fax: +44 (0)1946 832 661

ABB Inc.
Process Automation
125 E. County Line Road
Warminster
PA 18974
USA
Tel: +1 215 674 6000
Fax: +1 215 674 7183

www.abb.com

Note
We reserve the right to make technical changes or modify the contents of this document without prior notice. With regard to purchase orders, the agreed particulars shall prevail. ABB does not accept any responsibility whatsoever for potential errors or possible lack of information in this document.

We reserve all rights in this document and in the subject matter and illustrations contained therein. Any reproduction, disclosure to third parties or utilization of its contents in whole or in parts – is forbidden without prior written consent of ABB.

Copyright© 2013 ABB
All rights reserved

3KXF511511R1001

MODBUS is a registered trademark of the Modbus-IDA organization
PROFIBUS is a registered trademark of Profibus International
FOUNDATION is a trademark of the Fieldbus Foundation
HART is a registered trademark of the HART Communication Foundation

DS/FPD510–EN Rev. A 08.2013

Power and productivity
for a better world™