ABB MEASUREMENT & ANALYTICS | DATA SHEET

LLT100 Laser level transmitter

Measurement made easy

Customer benefits

The LLT100 is specifically made for industrial applications and harsh environments. It provides continuous, non-contact level measurement capabilities for process automation and inventory management in industries such as mining, aggregates, oil and gas, chemicals, food and beverages, power, pulp and paper, pharmaceuticals, and water and waste water.

Optimize process or inventory management
- Precise measurement of any solid or liquid
- Independent of material properties

Low cost of ownership
- Fast and flexible installation
- No maintenance
- Single product configuration works for many applications

Main features

ABB brings level transmitters to the next level of non-contact measurements by packaging laser ranging technology with the features required by industrial applications. Using a pulsed laser to perform time-of-flight measurement, the LLT100 provides accurate distance measurements while being powered by a 4 to 20 mA current loop. Available in an aluminum or stainless steel housing, it comes with a variety of process interfaces. It can meet the demands of hazardous areas, high pressure, and high temperature applications.

Convenient
- Easy setup function
- Articulated embedded graphical user interface
- 2-wire powered and HART 7 communication

Reliable
- Dust and fog penetration capabilities
- Accurate measurement at short and long range
- Explosion-proof class 1, division 1

Product configurations

Base model
Ideal for measuring levels of solids at up to 100 m (328 ft), and liquids at up to 30 m (98 ft) when the process is at normal pressures. This affordable and powerful level transmitter can be used in a wide variety of applications, including hazardous areas.

Range	0.5 to 100 m (2 ft to 330 ft)
Process fitting	ASME class 150, NPS 2 in DN 50 PN 16 flat face
Operating temperature	–40 to 60 °C (–40 to 140 °F)
Process pressure	–1 to 2 bar (29 psi)
Accuracy	11 mm (0.4 in)

Hygienic model
Ideal for food and beverage or pharmaceutical applications. Model fitted with a 4-inch triclover clamp interface with hygienic certifications. As with all models, available with aluminum or stainless steel housing.

Range	0.5 to 100 m (2 to 330 ft)
Process fitting	4-in triclover clamp
Operating temperature	–40 to 60 °C (–40 to 140 °F)
Process pressure	–1 to 1 bar (15 psi)
Accuracy	11 mm (0.4 in)

Product configurations

High pressure model
Ideal for high-pressure applications. Same performance as the base model, but fitted with a choice of pressure-rated flanges. As with all models, it is certified for use in hazardous area zone 1, and its laser beam can be sent safely into zone 0.

Range	0.5 to 100 m (2 to 330 ft)
Process fitting	ASME class 150/300, NPS 2 in DN 50 PN 16/40 raised face
Process temperature	–40 to 60 °C (–40 to 140 °F)
Process pressure	–1 to 49.6 bar (719 psi)
Accuracy	11 mm (0.4 in)

Accessories
Configure the transmitter to a wide variety of applications.
- Dust tube
- Purge ring for dust tube
- Cooling tube (increases maximum process temperature to 280 °C (535 °F)
- Heated window (requires 4-wire power) (on flameproof/ explosion proof configurations only; not available on intrinsically safe units)
- Through-the-glass HMI
- Flange adapters
- Alignment laser pointer
- External relays
- Rotating bracket, swivel flange

Functions

Advantages and new features

The laser transmitter measures any solid or liquid, at short or long range. A single configuration can meet a wide variety of requirements.

The LLT100 can be used in challenging hazardous areas, in the presence of potentially explosive dust or gases. It can be used in class 1/division 1 (zone 1) environments. For zone-rated environments, LLT100s configured with fused glass process flanges are approved for forming the barrier between zone 1 and zone 0, and sending its laser beam into zone 0.

For dusty applications, the dust tube prevents dust deposition on the window, lessening the need for preventive maintenance. For very high dust levels, a purge ring can be added to the dust tube to provide an air flow to enhance dust protection.

High temperature applications are made possible by the addition of a cooling tube. Cooling tubes with different process interfaces and different pressure ratings are available.

Solid applications

A typical LLT100 application is to measure the level of solids in silos and tanks. These vessels can be found in various industries such as mining, aggregates, chemicals, food and beverages, power, pulp and paper, pharmaceuticals, etc.

The high sensitivity of the LLT100 allows level measurements in tall vessels. The transmitter's narrow laser beam can be precisely aimed to circumvent obstacles. Its installation is very flexible, as the transmitter can be placed close to the wall or angled inside the vessel.

Finally, material build-up on vessel walls has no effect on the measurement, as the narrow beam angle (<0.3 degrees) prevents most interactions with the vessel sides.

The new LLT100 sets the new standard for industrial laser level measurement.

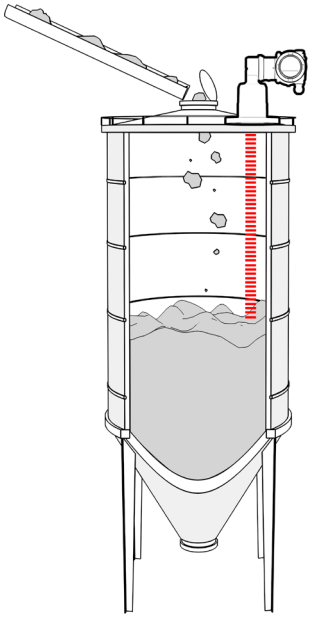

Liquid applications

Liquid level measurements represent a large portion of level measurement applications. The LLT100 can detect any liquid, even transparent ones.

The LLT100 comes with the heated window option to prevent condensation on its optics.

In liquid measurement applications, the laser beam must be as perpendicular as possible to the liquid surface. Beam alignment should be within ±5 degrees of the vertical. To help in performing laser beam alignment, the swivel flange accessory is very convenient as it provides a simple and efficient way to precisely align the laser beam.

For high pressure applications, the LLT100 comes with a variety of process flanges, rated at up to 49.6 bar (719 psi).

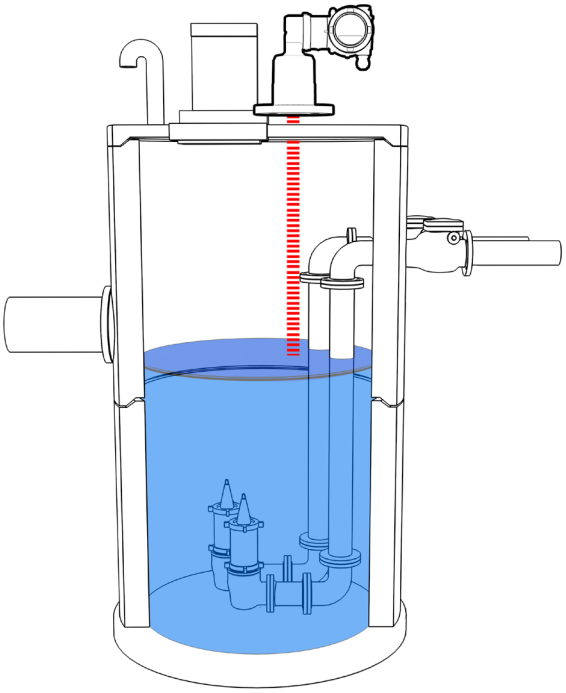

Mixer/obstruction

Another challenge in the field of level measurement is obtaining reliable measurements in the presence of obstructions or mixing blades.

The very narrow beam (<0.3 degrees) of the LLT100 allows installation of the instrument at almost any place on top of the vessel and its positioning between the vessel wall and the edge of the mixer, thus providing reliable measurements. When it is not possible to avoid the mixer blades, the LLT100 has advanced processing functions that can still perform the measurement reliably by efficiently tracking the real level when the mixer blades cross the path of the laser beam.

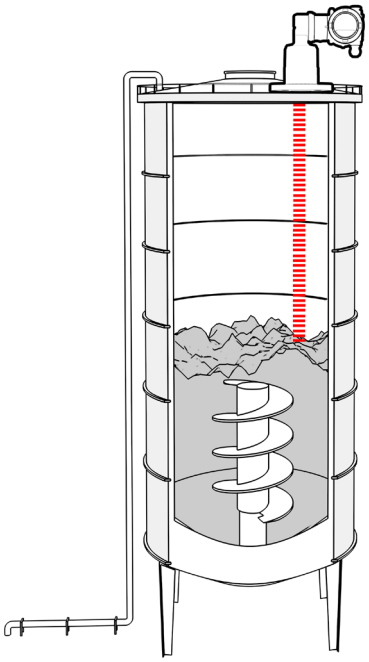

Positioning

Another application for the LLT100 is accurate position measurement for wagons, tipper cars or other moving objects.

An tipper car that is improperly positioned when it unloads its cargo can causes damages and lost time. Similarly, the LLT100 can be used to prevent collisions by moving cranes and other machinery.

The LLT100 can provide accurate position measurement at distances up to 200 m (660 ft) with the added use of a reflector.

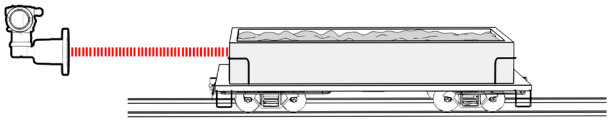

Specification

Measurement

Range

0.5 to 30 m (2 to 100 ft) for liquids
0.5 to 100 m (2 to 330 ft) for solids
0.5 to 200 m (2 to 660 ft) for positioning applications[1]

Resolution

5 mm (0.2 in)

Typical accuracy

11 mm (0.4 in)

Measuring beam

Laser wavelength: 905 nm, eye safe, Class 1

Laser beam divergence

< 0.3°

Environmental conditions

Operating temperature

–40 to 60 °C (–40 to 140 °F)

Storage temperature

–40 to 85 °C (–40 to 185 °F)

Survival temperature

–40 to 80 °C (–40 to 175 °F)

Process pressure

Base model:	–1 to 2 bar (29 psi)
Hygienic model:	–1 to 1 bar (15 psi)
Pressure-rated model:	–1 to 49.6 bar (719 psi), depending on flange

Vibration resistance

Compliant with IEC 60068–2–6:2007 Environmental testing – Part 2–6: Tests – Test Fc: Vibration (sinusoidal), 10–150 Hz 0.35mm–50m/s²

Output

Analog

4 to 20 mA, NAMUR compliant

Digital

HART 7 (multi-variable output)

Communication

Local HMI, EDD/DTM, handheld

Power supply

Powered from the current loop (flameproof/explosion proof/ dust-ignition proof version):

4 to 20 mA, 15.5 to 42 V DC (if using HART, minimum input voltage is 21 V DC)

For intrinsically safe version:

4 to 20 mA, 15.5 to 30 V DC maximum (21 to 30 V DC for HART)

Heated lens option (for flameproof/explosion proof/dust-ignition protection only)

24 V DC (3 W)

Mechanical

Housing material

Powder coated aluminum (standard),
316L stainless steel (SST)(option)

Dimensions (W × H × D)

Universal – flat flange: 247 × 215 × 165 mm (9.7 × 8.5 × 6.5 in)
Class 150 – raised flange: 240 × 242 × 154 mm (9.5 × 9.5 × 6.1 in)
Class 300 – raised flange: 247 × 242 × 165 mm (9.7 × 9.5 × 6.5 in)
DIN PN 16 – raised flange: 247 × 242 × 165 mm (9.7 × 9.5 × 6.5 in)
DIN PN 40 – raised flange: 247 × 242 × 165 mm (9.7 × 9.5 × 6.5 in)
Hygienic flange: 223 × 215 × 137 mm (8.8 × 8.5 × 5.4 in)

Weight of standard model

Aluminum housing with universal aluminum flange: 3.7 kg (8.2 lb)
316L SST housing with universal SST flange: 8.6 kg (19.0 lb)

Weight of pressure-rated model (depending on flange)

Aluminum housing: 6.7 to 7.2 kg (14.8 to 15.9 lb),
316L SST housing: 10.0 to 10.5 kg (22.1 to 23.2 lb)

Weight of hygienic model

Aluminum housing: 5.8 kg (12.8 lb)
316L SST housing: 9.1 kg (20.1 lb)

Protection class

IP66/IP67/NEMA 4X (for all versions except flange H which is IP66/type 4X)

Process fitting

Flange (ASME 2 in, DN50), hygienic fitting/triclover 4 in (ISO2852)

Wetted parts

Flange A: Aluminum, borosilicate window, silicone O–ring
Flange B: 316L SST, borosilicate window, silicone O–ring
Flanges C, D, F, G: 316L SST, fused borosilicate window
Flange H: 316L SST, polycarbonate window, silicone SB70 O–ring, FDA and 3–A approved

Mean time between failures (MTBF)

25 years

[1] When using a reflective target

Specification

Operation

Display

Integrated 128 × 64 pixels LCD display with through-the-glass (TTG) interface

Software features

Volume computation, damping, filtering, thresholds/ alarms, user-defined display (with HMI)

Optical

Total optical aperture

50 mm (2 in)

Standard window material (flanges A and B)

Tempered borosilicate glass

Pressure rated window material (flanges C, D, F, G)

Borosilicate fused glass

Hygienic window material (flange H)

Polycarbonate window

H flange maximum permissible cleaning temperature

CIP cleaning	T_{max}	T_{max} minutes	T_{amb}
Steam	100 °C (212 °F)	30	25 °C (77 °F)

Lens impact resistance

Tested at 4 joules

Beam divergence

Δ < 0.3°

Beam spot width

Distance	1 m (3 ft)	3 m (10 ft)	5 m (16 ft)	10 m (33 ft)	20 m (66 ft)	30 m (98 ft)	50 m (164 ft)	100 m (328 ft)	150 m (492 ft)
Approx. spot width	0.7 cm (0.3 in)	2.0 cm (0.8 in)	3.3 cm (1.3 in)	6.6 cm (2.6 in)	13.5 cm (5.3 in)	20 cm (7.9 in)	34 cm (13.4 in)	69 cm (27.2 in)	108 cm (42.5 in)

Beam direction

90° ±5° from mounting flange for liquids measurements

Laser

Measuring laser

905 nm near infrared pulsed semiconductor laser

7.1 µW average power output

45 W peak power output

Measuring laser safety

Always on IEC60825–1 Ed. 2, 2007

A Class 1 laser is safe for all conditions of use.

Specification

Approvals		
CE	ATEX Directive 2014/34/EU Electromagnetic compatibility Directive (EMC) 2014/30/EU Low Voltage Directive (LVD) 2014/35/EU Restriction of Hazardous Substances Directive (RoHS) 2011/65/EU	Applied standards: EN 61326–1:2013, EN/IEC 60529, EN/IEC 61010–1:2010, EN/IEC 60825–1
ATEX, IECEx, KCs (flameproof/explosion proof/dust-ignition proof version)	ATEX: FM16ATEX0032X, IECEx: FMG 16.0023X, KCs registration no: 17–AV4BO–0305X For flanges A and B: II 2 (1) G Ex db [op is T6 Ga] IIC T6…T5 Gb –50 °C ≤ Ta ≤ +75 °C…+85 °C II 2 (1) D Ex tb [op is Da] IIIC T85°C…T100°C Db –50 °C ≤ Ta ≤ +75 °C…+85 °C – IP66/IP67 Ex db [op is T6 Ga] IIC T6…T5 Gb –50 °C ≤ Ta ≤ +75 °C…+85 °C Ex tb [op is Da] IIIC T85°C…T100°C Db –50 °C ≤ Ta ≤ +75 °C…+85 °C – IP66/IP67 For flanges C, D, F, and G: II 1/2 (1) G Ex db [op is T6 Ga] IIC T6…T5 Ga/Gb –50 °C ≤ Ta ≤ +75 °C…+85 °C II 2 (1) D Ex tb [op is Da] IIIC T85°C…T100°C Db –50 °C ≤ Ta ≤ +75 °C…+85 °C – IP66/IP67 Ex db [op is T6 Ga] IIC T6…T5 Ga/Gb –50 °C ≤ Ta ≤ +75 °C…+85 °C Ex tb [op is Da] IIIC T85°C…T100°C Db –50 °C ≤ Ta ≤ +75 °C…+85 °C – IP66/IP67	EN/IEC 60079–0, EN/IEC 60079–1, EN/IEC 60079-26, EN/IEC 60079-28, EN/IEC 60079–31, EN/IEC 60529
FM (flameproof/explosion proof/dust-ignition proof version)	FM16US0106X, FM16CA0060X US & CANADA, ENCL. Type 4X, IP66/IP67, “Seal not required” – “DUAL SEAL” For flanges A, B, C, D, F, and G and only for housings AI and SI: US: Class I, Division 1, Groups A, B, C, D T5 –50 °C ≤ Ta ≤ 85 °C US: Class I, Division 1, Groups A, B, C, D T6 –50 °C ≤ Ta ≤ 75 °C CAN: Class I, Division 1, Groups B, C, D T5 –50 °C ≤ Ta ≤ 85 °C CAN: Class I, Division 1, Groups B, C, D T6 –50 °C ≤ Ta ≤ 75 °C Class II/III, Division 1, Groups E, F, G T5 –50 °C ≤ Ta ≤ 85 °C Class II/III, Division 1, Groups E, F, G T6 –50 °C ≤ Ta ≤ 75 °C For flanges A, B, C, D, F, and G and only for housings AM and SM: US only: Class I, Division 1, Groups A, B, C, D T5 –50 °C ≤ Ta ≤ 85 °C US only: Class I, Division 1, Groups A, B, C, D T6 –50 °C ≤ Ta ≤ 75 °C US only: Class II/III, Division 1, Groups E, F, G T5 –50 °C ≤ Ta ≤ 85 °C US only: Class II/III, Division 1, Groups E, F, G T6 –50 °C ≤ Ta ≤ 75 °C For flanges A and B: Class I, Zone 1, AEx/Ex db [op is T6 Ga] IIC T6…T5 Gb –50 °C ≤ Ta ≤ +75 °C…+85 °C Zone 21, AEx/Ex tb [op is Da] IIIC T85°C…T100°C Db –50 °C ≤ Ta ≤ +75 °C…+85 °C For flanges C, D, F, and G: Class I, Zone 0/1, AEx/Ex db [op is T6 Ga] IIC T6…T5 Ga/Gb –50 °C ≤ Ta ≤ +75 °C…+85 °C Zone 21, AEx/Ex tb [op is Da] IIIC T85°C…T100°C Db –50 °C ≤ Ta ≤ +75 °C…+85 °C	FM Class 3600:2011, FM Class 3615:2006, FM Class 3616:2011, FM Class 3810:2005, ANSI/ISA 61010–1:2012, ANSI/ISA 60079–0:2013, ANSI/UL 60079–1:2015, ANSI/ISA 60079–26: 2011, ANSI/ISA 60079–28:2013, ANSI/ISA 60079–31:2015 , ANSI/ISA 12.27.01:2011, ANSI/NEMA 250:2014, ANSI/IEC 60529:2004 CSA–C22.2 No. 0.4:2013, CSA–C22.2 No. 0.5:2012, CSA–C22.2 No. 25:2014, CSA–C22.2 No. 30:2012, CSA–C22.2 No. 94:2011, CAN/CSA– C22.2 No. 60079–0:2015, CAN/ CSA–C22.2 No. 60079–1:2011, CAN/ CSA–C22.2 No. 60079–31:2015, CSA– C22.2 No. 60529:2015,CAN/ CSA–C22.2 No. 61010–1:2012
CSA (ordinary location approval)	CLASS – C363186 – ELECTRICAL EQUIPMENT FOR MEASUREMENT USE – certified to US standard CLASS – C363106 – ELECTRICAL MEASUREMENT AND TEST EQUIPMENT – certified to CAN standard	CAN/CSA–C22.2 No. 61010–1–12 UL Std. No. 61010–1 (3rd Edition)
ATEX, IECEx (instrinsically safe version)	ATEX: Sira 19ATEX1195X, IECEx: CSA 19.0028X For flanges A and B: II 2 (1) G; IP66/IP67; Ex db ib [op is Ga] IIC T6…T5 Gb; II 2 (1) D ; IP66/IP67; Ex tb ib [op is Da] IIIC T85°C…T100°C Db; For flanges C, D, F, and G: II 1/2 (1) G; IP66/IP67; Ex db ib [op is Ga] IIC T6…T5 Ga/Gb; II 2 (1) D ; IP66/IP67 Ex tb ib [op is Da] IIIC T85°C…T100°C Db;	EN 60079-0:2012 + A11:2013 EN 60079-1:2014 EN 60079-11:2012 EN 60079-26:2015 EN 60079-28:2015 EN 60079-31:2014 IEC 60079-0:2011 Edition:6.0, IEC 60079-1:2014-06 Edition:7.0, IEC 60079-11:2011 Edition:6.0, IEC 60079-26:2014-10 Edition:3.0, IEC 60079-28:2015 Edition:2, IEC 60079-31:2013 Edition:2
3A	3–A Certificate authorization number: 3500	3-A® Sanitary Standards for Refractometers and Energy Absorbing Optical Sensors for Milk and Milk Products, Number 46-03
Segurança	Certificado N.º: TÜV 17.1989 X Para LLT100 com janela cementada (cemented window) Ex db [op is T6 Ga] IIC T6…T5 Gb Ex tb [op is Da] IIIC T85°C…T100°C Db –50°C <= Tamb <= +75°C –50°C <= Tamb <= +85°C Para LLT100 com vidro fundido (fused glass) Ex db [op is T6 Ga] IIC T6…T5 Ga/Gb Ex tb [op is Da] IIIC T85°C…T100°C Db –50°C <= Tamb <= +75°C –50°C <= Tamb <= +85°C	Standards ABNT NBR IEC 60079–0:2016, ABNT NBR IEC 60079–1:2013, ABNT NBR IEC 60079–26:2016 ABNT NBR IEC 60079–28:2016 ABNT NBR IEC 60079–31:2014 ABNT NBR IEC 60529:2017 Portaria INMETRO nº 179 de 18/05/2010.
CRN	Canadian registration number : 0F18455.5C (all provinces)	ASME B31.1 et B31.3, category F (measuring devices)

Approvals			
EAC		Russia custom union Ex–маркировка уровнемеров с Фланцами A и B уровнемеров с Фланцами C, D, F и G	1Ex db [ob isT6 Ga] IIC T6… T5 Gb X, Ex tb [op is Da] IIIC T85°C…T100°C Db X Ga/Gb Ex db [opis T6 Ga] IIC T6…T5 X, Ex tb [op is Da] IIIC T85°C… T100°C Db X
SIL 2 – Exida		Functional safety Random capability : Type B element, SIL 2 @ HFT = 0 ; route 1H Systematic capability : SC2 (SIL 2 capable)	IEC 61508 : 2010 Parts 1–7

Dimensions

Dimensions in mm (in)

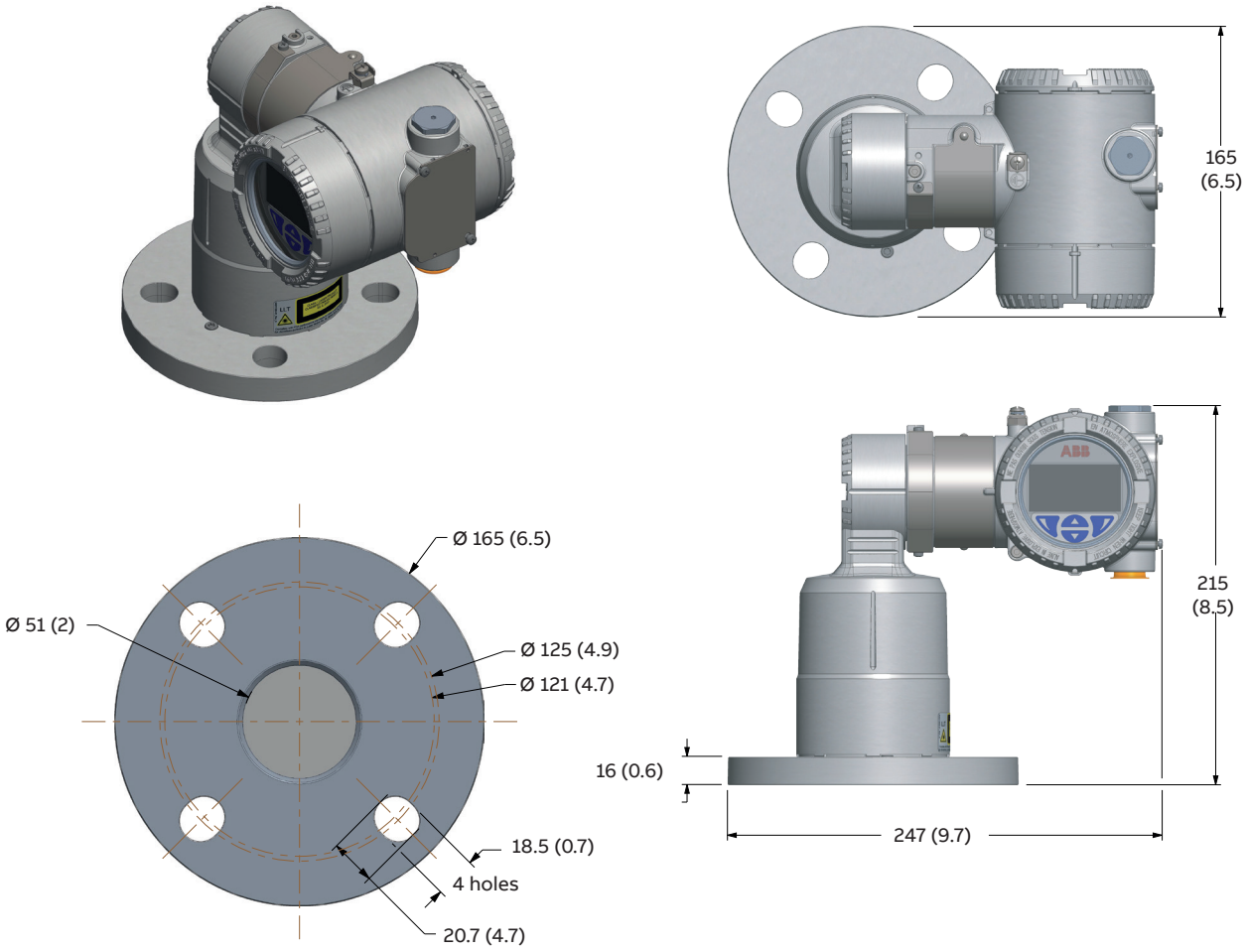

Figure 1 LLT100 with universal flange (aluminum and stainless steel)

Dimensions

Dimensions in mm (in)

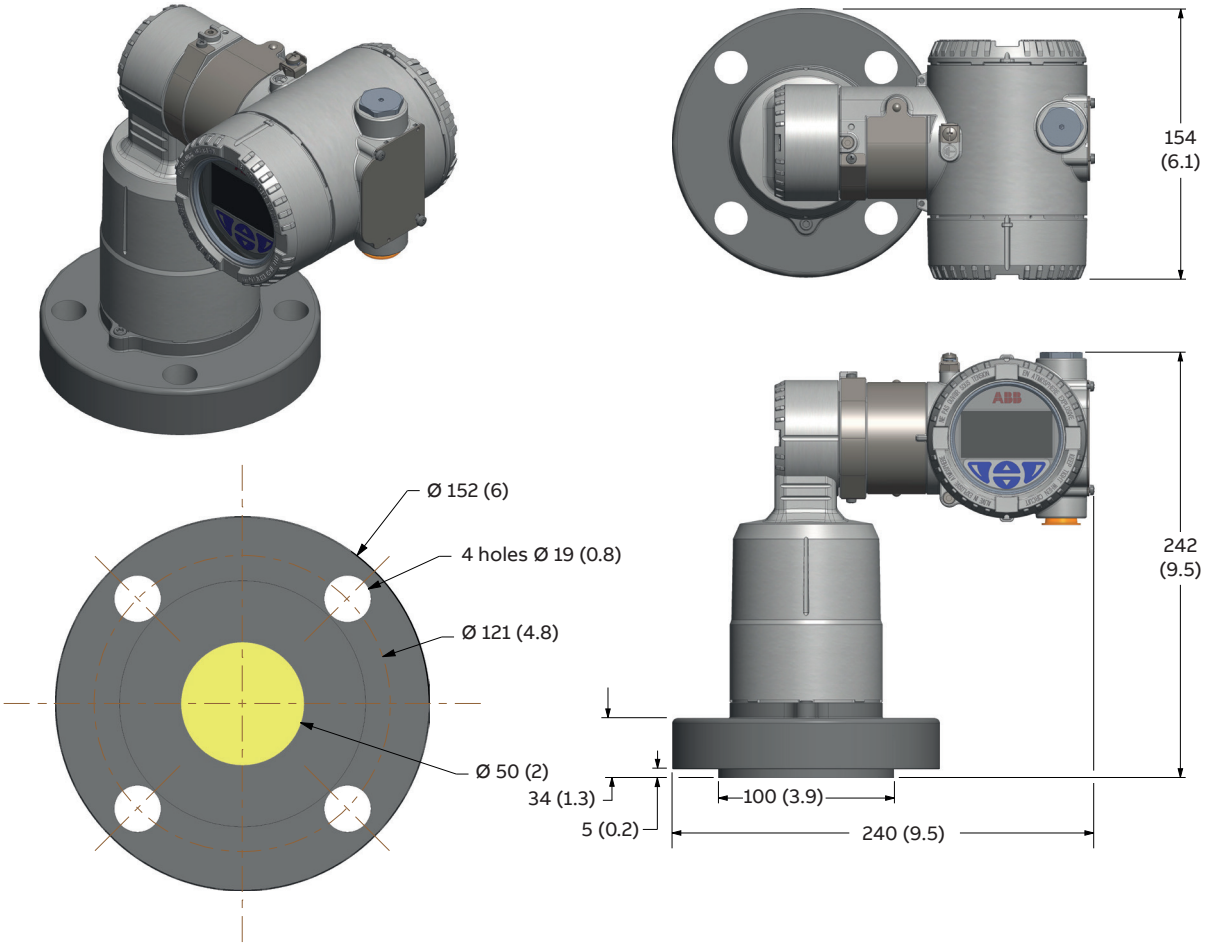

Figure 2 LLT100 with class 150 flange

Dimensions

Dimensions in mm (in)

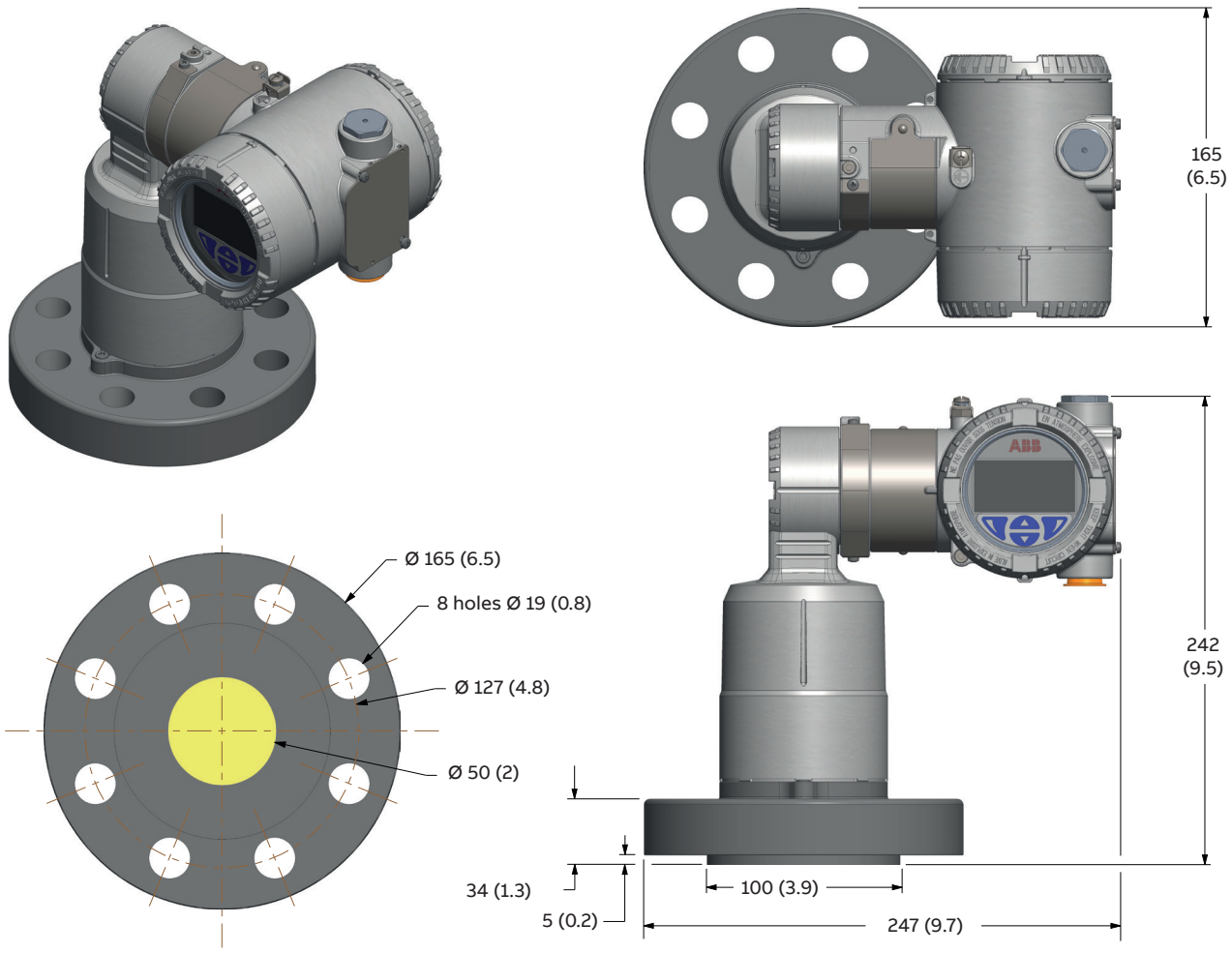

Figure 3 LLT100 with class 300 flange

Dimensions

Dimensions in mm (in)

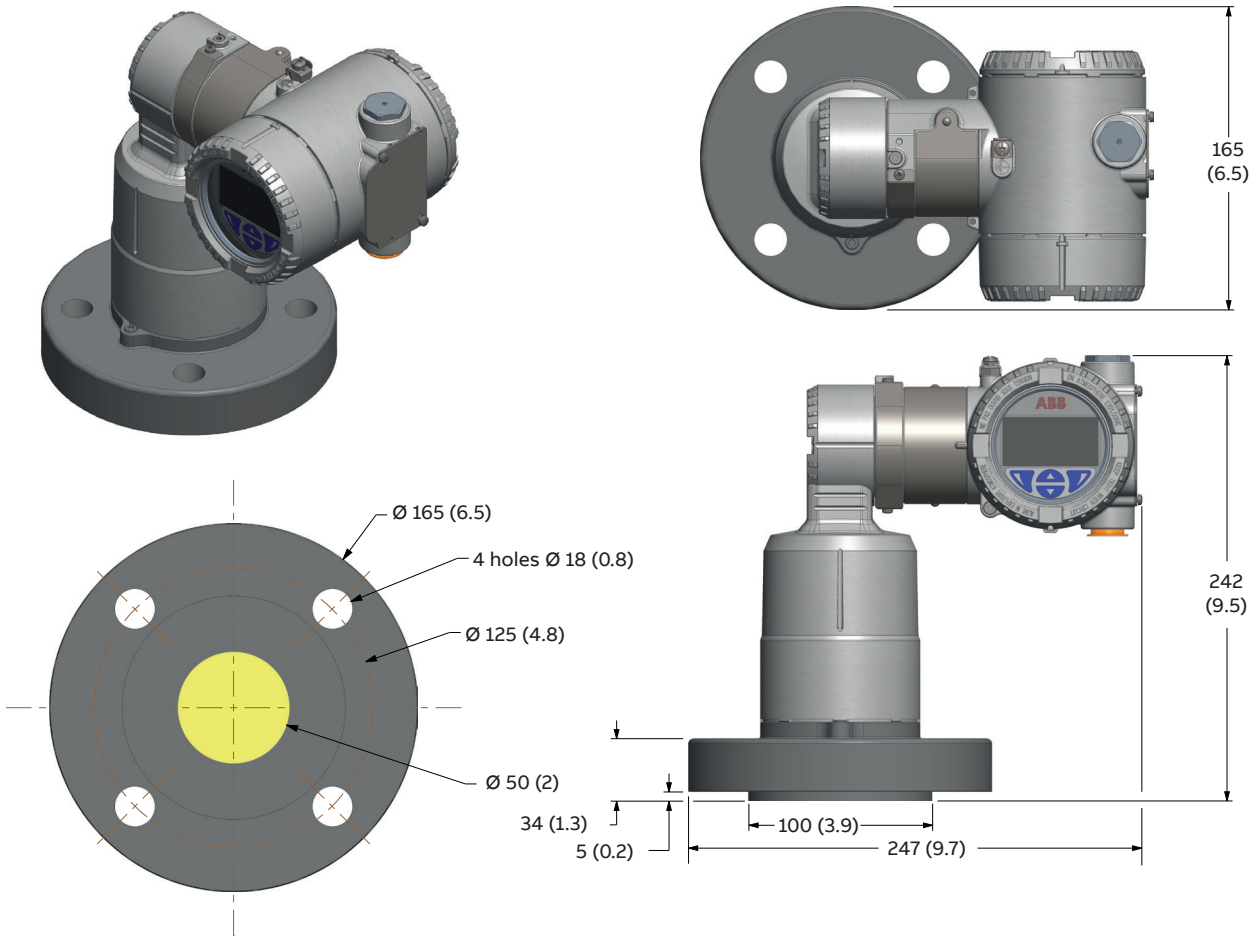

Figure 4 LLT100 with PN16/PN 40 flange

Dimensions

Dimensions in mm (in)

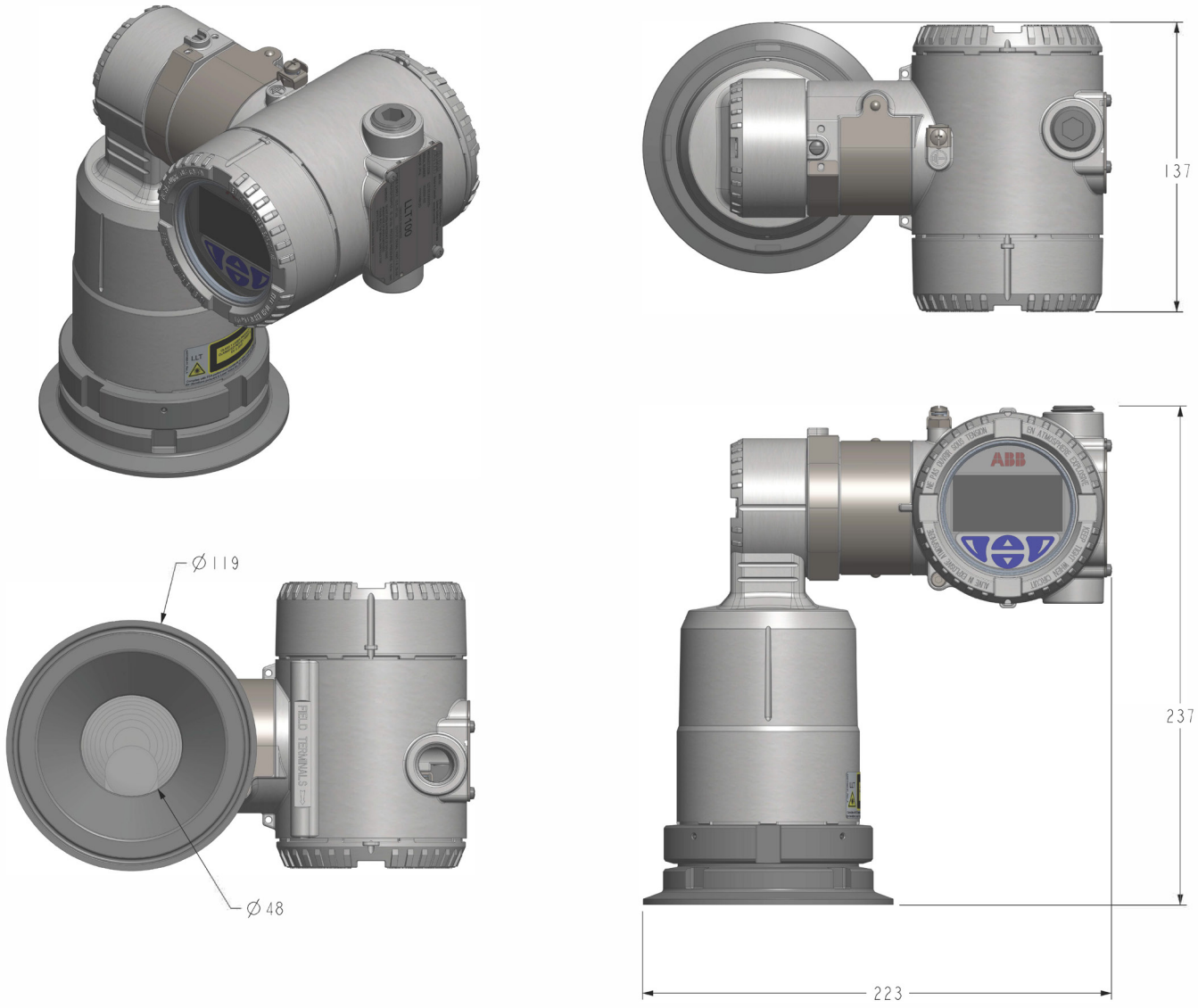

Figure 5 LLT100 with triclover flange

Interface

HART terminal with heater option – 2 + 2 wires (flameproof/explosion proof/dust-ignition proof version only)

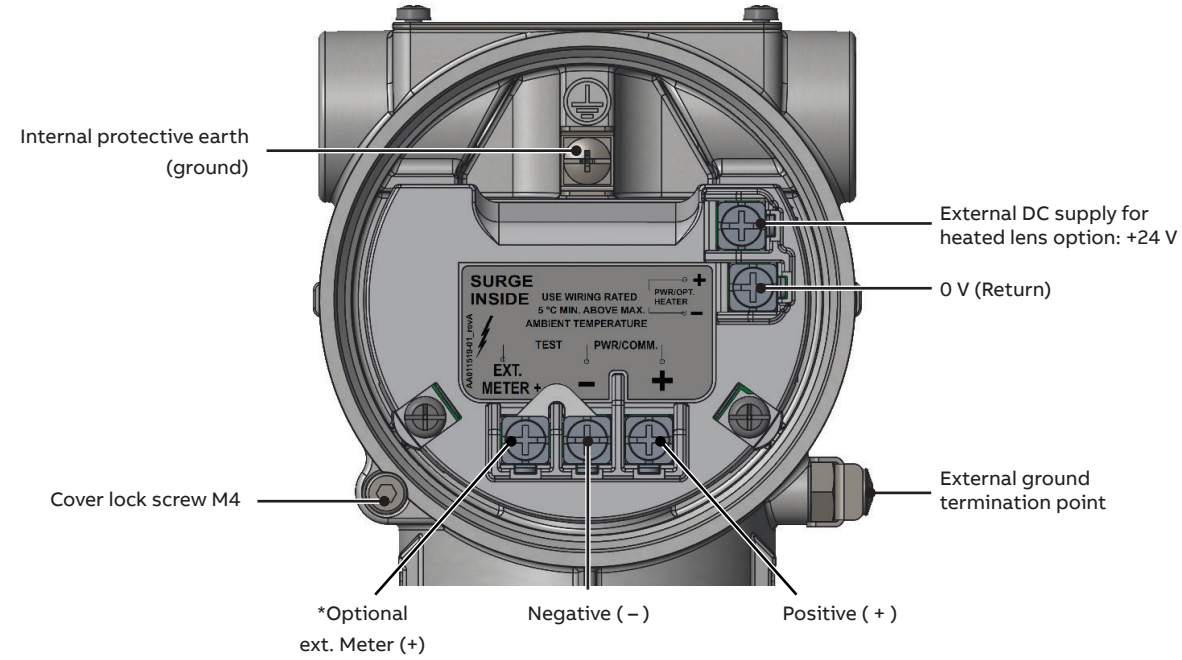

Figure 6 HART terminal with heater option

HART Terminal without heater option (2-wire terminal for Intrinsically Safe version)

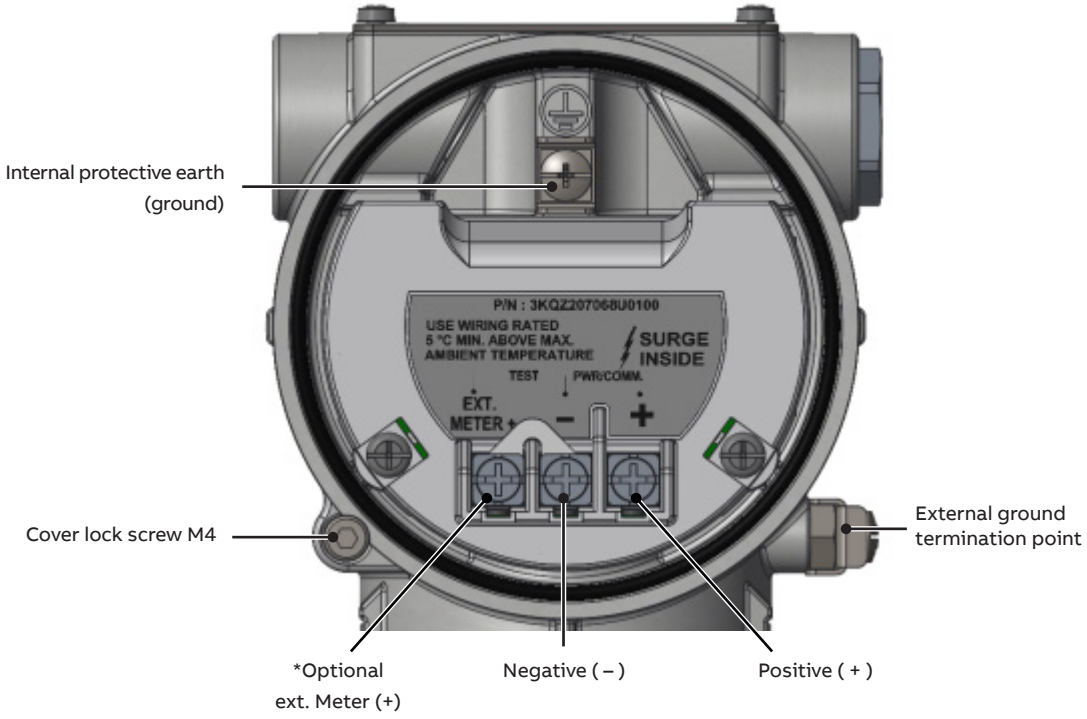

Figure 7 HART Terminal without heater option (2-wire terminal for Intrinsically Safe version)

Accessories

Dust tube (P901)

Dimensions in mm (in)

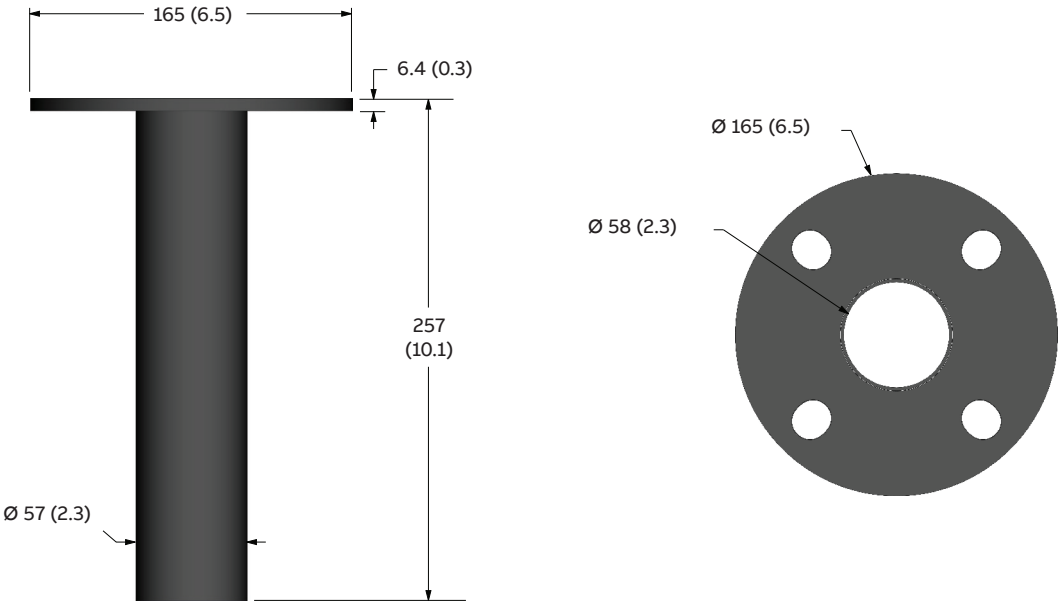

Figure 8 Dust tube

Accessories

Purge ring (P910)

Dimensions in mm (in)

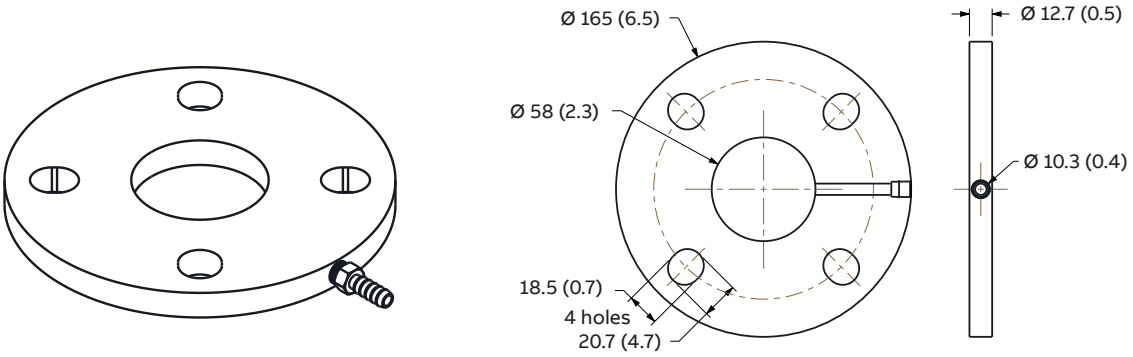

Figure 9 Purge ring

Dust tube assembly with purge ring

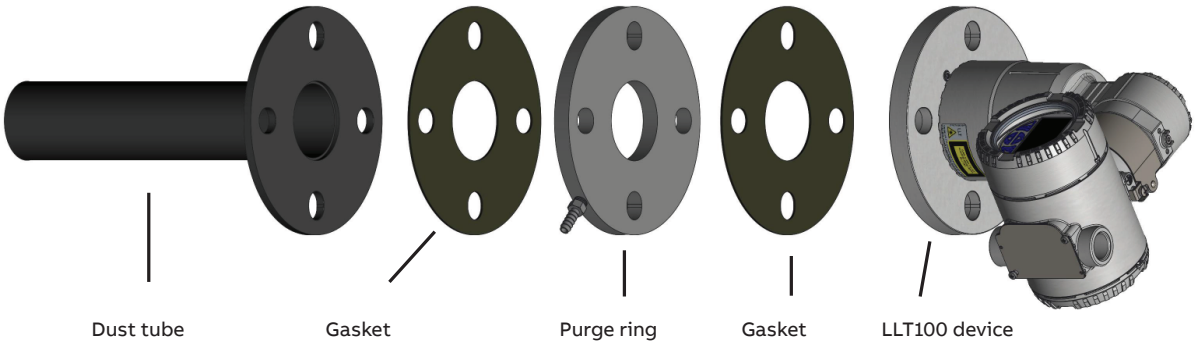

Figure 10 Dust tube with purge ring

Accessories

Cooling tube (P920)

Dimensions in mm (in)

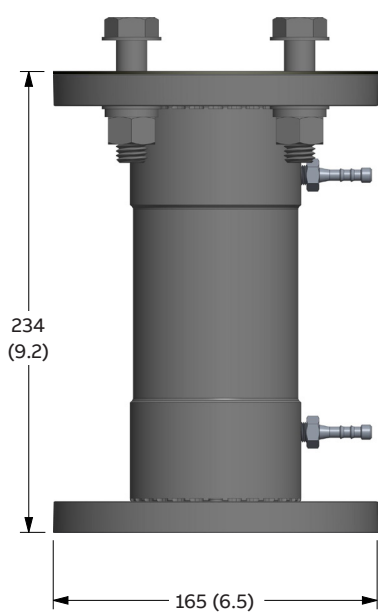

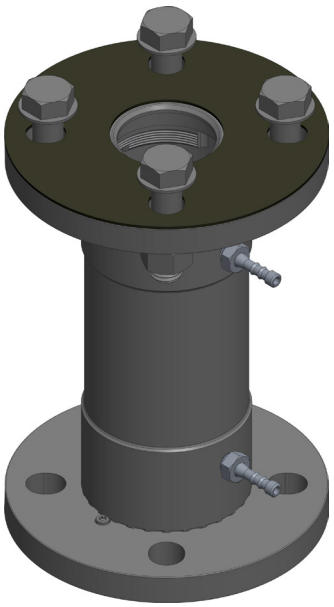

Cooling tube (P921, P922, P923, P924)

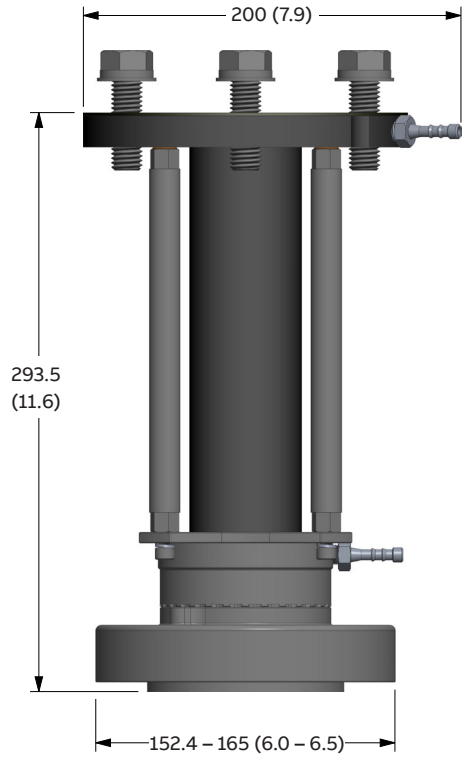

Depending on process flange

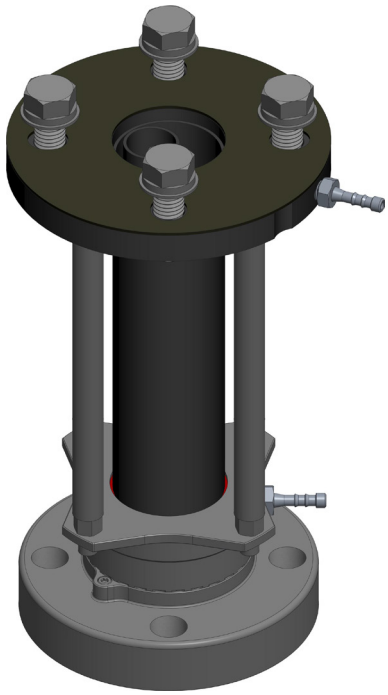

Figure 11 Cooling tubes

Accessories

Adjustable pivot bracket (A900)

Dimensions in mm (in)

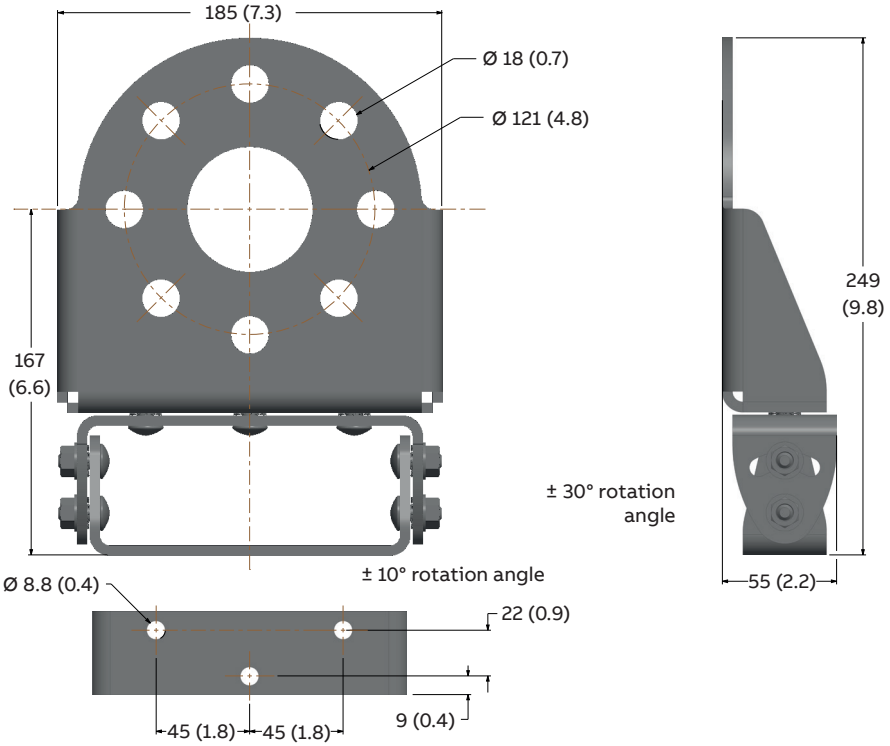

Figure 12 Adjustable pivot bracket

Adjustable swivel flange (A910)

Dimensions in mm (in)

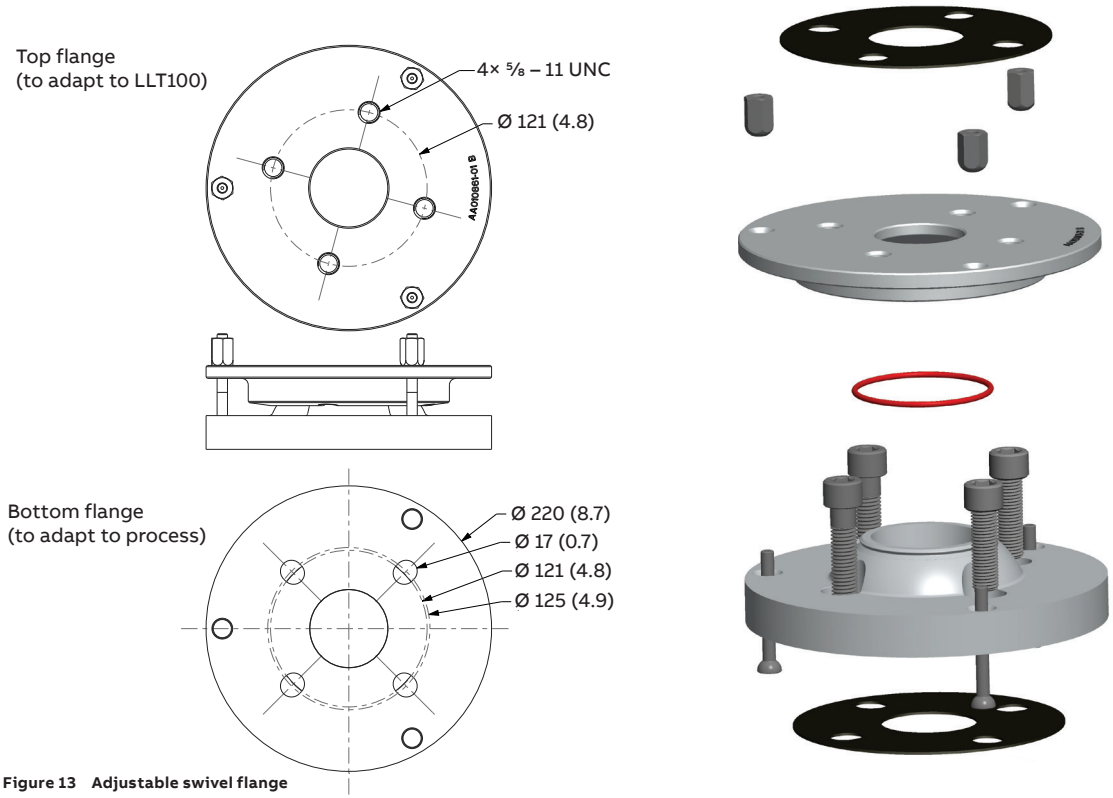

Figure 13 Adjustable swivel flange

Accessories — specifications

Dust tube

Base plate diameter
165 mm (6.5 in) mounts on LLT100 flanges A and B
Length
257 mm (10.1 in)
Material
316 stainless steel
Gasket material
Black compressible Buna–N rubber durometer rating shore 60A
Function
Static air space prevents dust buildup

Adjustable swivel flange

Outer diameter
210 mm (8.3 in)
Mounting bolt pattern
3 bolt holes, 10 mm (0.4 in) diameter
Tilt angle for aiming
Continuously adjustable from 0° to 6°
Material
Aluminum

Purge ring

Diameter
1655 mm (6.5 in), mounts on LLT100 flanges A and B.
Function
Allow air purge in front of LLT100 window. Can be used with dust tube to purge tube.
Purge air flow:
–Must use oil–free dry air
–Recommended flow between 0.5 and 4 l/min
Purge fitting:
– ¼-barbed tube fitting
Material
Aluminum

Adjustable pivot bracket

Overall dimensions
185 × 249 × 55 mm (7.3 × 9.8 × 2.2 in)
Opening diameter
60 mm (2.4 in)
Mounting plate thickness
5 mm (0.2 in)
Mounting bolt
4× HHCS ⅝–11 × 2 SS + 8× washers + 2× lock washers + 4× nuts, bolt hole 8 × 18 mm (0.7 in)
Material
304 stainless steel

Reflector

Function
Reflective panel for positioning applications up to 200 m (656 ft)
Size
90 × 90 cm (36 × 36 in)
Material
Aluminum with reflective paint

Cable glands

Description
ATEX cable glands with ½ in NPT or M20 thread size
Material
Raw brass/Nickel plated brass

Demo kit

Description
Rugged carrying case with LLT100, dust tube, battery pack, laser pointer tool

External laser pointer tool

Function
Laser pointer accessory used for targeting and aiming purpose.
Pointing laser
650 nm wavelength
Less than 1 mW output power
Pointing laser safety
Class 2M

Ordering information

Base model	**LLT100**	**XX**	**X**	**X**	**X**	**XX**	**XX**	**XXX**	**XXX**
Body and electrical connection									
Aluminum body – M20 × 1.5		AM							
Stainless steel body – M20 × 1.5		SM							
Aluminum body – ½ in NPT		AI							
Stainless steel body – ½ in NPT and electrical connection		SI							
Demo kit		DEMO							
Process flange									
ASME 2 in class 150/DIN 50 mm PN16 bolt pattern, flat face, alu, cem. window			A						
ASME 2 in class 150/DIN 50 mm PN16 bolt pattern, flat face, SS, cem. window			B						
ASME 2 in class 150, SS, raised face, fused window			C						
ASME 2 in class 300, SS, raised face, fused window			D						
DIN 50 mm PN16, SS, raised face, fused window			F						
DIN 50 mm PN40, SS, raised face, fused window			G						
Triclover 4 in, SS, polycarbonate window			H						
Heated window									
With heated window – requires 24 V input (for explosion proof/flameproof/dust-ignition proof only)				H					
No heated window (for intrinsically safe models, with explosion protection E15 and E16 only)				N					
Communication protocol									
4–20 mA HART					10				
Display									
None – (blind cover)						L0			
Digital LCD integral display with TTG (Through-the-Glass) activated keypad						L5			
Additional order codes									
Explosion Protection Certifications (multi–choice)									
None									
ATEX (Ex d Cat 1/2G and 2D)								E01	
IECEx (Ex d Cat 1/2G and 2D)								E02	
FMus (Ex d CI, CII, CIII D1) Groups ABCEDFG								E03	
cFM (Ex d CI, CII, CIII D1) Groups BCDEFG								E04	
ATEX (Ex d Cat 2G and 2D)								E05	
IECEx (Ex d Cat 2G and 2D)								E06	
KCs (Ex d Cat 1/2G and 2D)								E07	
KCs (Ex d Cat 2G and 2D)								E08	
INMETRO (Ex d Cat 1/2G and 2D)								E09	
INMETRO (Ex d Cat 2G and 2D)								E10	
EAC (Ex d Cat 1/2G and 2D)								E11	
EAC (Ex d Cat 2G and 2D)								E12	
ATEX/IECEx (Ex i + d Cat 1/2G and 2D) Intrisically safe + Flameproof/Dust proof								E15	
ATEX/IECEx (Ex i + d Cat 2G and 2D) Intrisically safe + Flameproof/Dust proof								E16	
Cable glands and plugs									
ATEX/IECEx Cable gland NPT–½ and stopping plug									G03
ATEX/IECEx Cable gland M20 and stopping plug									G04

Ordering information

Accessory options — tube (multi–choice)	**XXXX**
Dust tube	P901
Cooling tube, no window, no pressure rating	P920
Cooling tube, with window, no pressure rating	P921
Cooling tube, process interface NPS 2 in class 150 flange with window	P922
Cooling tube, process interface NPS 2 in class 300 flange with window	P923
Cooling tube, process interface DN 50 PN40 flange with window	P924
Accessory options — bracket	
Rotating bracket	A900
Swivel flange	A910
Accessory options	
Purge ring for dust tube	P910
Laser alignment tool	LAS
Reflector panel	REFL
Polycarbonate sight glass	PSG
Adaptor to LM80 bolt pattern	ADA
Gaskets and O–rings	
Gasket (qty 2) for flat face process flange (A or B) BUNA–N	G900
Triclover O–ring (qty 10), 4 in diameter	G901
Process flange converter	
Stainless steel 3 in/DN80 adapt plate, class 150 & DN80/PN6 bolt ptrn, non-pres. rated	PC03
Stainless steel 4 in/DN100 adapt plate, class 150 & DN100/PN10 bolt ptrn, non-pres. rated	PC04
Stainless steel 6 in/DN150 adapt plate, class 150 & DN150/PN10 bolt ptrn, non-pres. rated	PC06
3 in raised face ANSI class 150 flange converter	FC04
4 in raised face ANSI class 150 flange converter	FC05
6 in raised face ANSI class 150 flange converter	FC06
DIN80 raised face PN40 flange converter	FC10
DIN100 raised face PN40 flange converter	FC11
DIN150 raised face PN40 flange converter	FC12
SIL certification	
SIL2, IEC 61508	CS
Certificate	
Material declaration of compliance EN 10204-type 2.1	MTC
Certificate of origin	COO
Canadian registration number marking on product	CRN
Attested certificate of origin	ACO
Calibration certificate	CC
ID tag plate	
Supplemental declaration of compliance EN 10204-type 2.1 wired–on stainless steel plate	WSSP
Supplemental screwed–on stainless steel plate	SSSP
Hard copy user documentation	
German hardcopy operating instruction manual	M1
French hardcopy operating instruction manual	M2
English hardcopy operating instruction manual	M3
Chinese hardcopy operating instruction manual	M4

Castel Maggiore (BO) 40013
Via Lirone 60/i

e-mail: info@eurotecsrl.com
Tel: +39 051/6321595
Website: www.eurotecsrl.com

C.F.: 04103780377
P.I.: 01596581205

ABB Inc.
Level Measurement Products
Email: lasers@ca.abb.com

www.abb.com/laserlevel
www.youtube.com/abbmeasurementexpert

We reserve the right to make technical changes or modify the contents of this document without prior notice. With regard to purchase orders, the agreed particulars shall prevail.
ABB does not accept any responsibility whatsoever for potential errors or possible lack of information in this document.

We reserve all rights in this document and in the subject matter and illustrations contained therein
Any reproduction, disclosure to third parties or utilization of its contents – in whole or in parts – is forbidden without prior written consent of ABB.
©ABB, 2019

DS/LLT100/-EN Rev. F 12.2019